Norwood Foundry
LIMITED

SINCE 1905

WATERWORKS FITTINGS

Cast Iron or Ductile Iron
AWWA C110, ANSI A21.10-93

Cast Iron Tyton® Fittings
ANSI A21.10-93, AWWA C110-93

Norwood Foundry Limited manufactures cast iron Tyton (push-on) fittings in nominal diameters of 100mm through 600mm. Sizes 100mm to 300mm are pressure rated at 1725 kPa (250 psi), while the 350mm to 600mm are rated at 1035 kPa (150 psi). These fittings are produced in accordance with ANSI A21.10-93, AWWA C110-93. These fittings are also available in ductile iron and rated for 2413 kPa (350 psi) working pressure.

Tyton fittings are for use with PVC pipe with ductile iron pipe O.D. conforming to AWWA C900 and C905, and ductile iron pipe conforming to AWWA C151. The Tyton joint is a push-on compression joint complying with AWWA C111/ANSI A21.11. The standard Tyton gasket is SBR (Styrene-Butadiene Rubber) but other specialized gaskets such as nitrile and neoprene are available.

Tie rod lugs are integrally cast on the bells of the fittings, with two lugs standard and other combinations available by special order.

In addition to our standard Tyton fitting line, we also manufacture mixed end fittings. These are available in almost any configuration of flange, plain end, or Tyton ends. The fittings can also be made to reduce on the run.

Waterworks fittings are generally shipped coated interior and exterior with NSF61 EZ-Kote potable coating. On special order, they are also available with AWWA Standard interior and/or exterior fusion epoxy coating.

BENDS

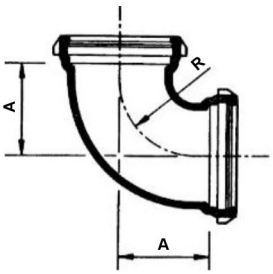

90º Bend

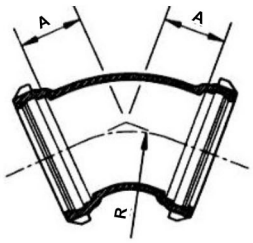

45º Bend

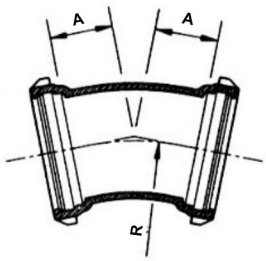

22½º Bend

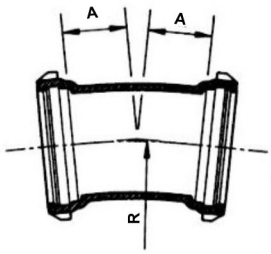

11¼º Bend

90º Bend Dimensions

Nominal Diameter		A		R	
mm	in.	mm	in.	mm	in.
100	4	165	6.5	114	4.5
150	6	203	8.0	152	6.0
200	8	229	9.0	189	7.0
250	10	279	11.0	229	9.0
300	12	305	12.0	254	10.0
350	14	356	14.0	292	11.5
400	16	381	15.0	318	12.5
450	18	419	16.5	356	14.0
600	24	559	22.0	470	18.5

45º Bend Dimensions

Nominal Diameter		A		R	
mm	in.	mm	in.	mm	in.
100	4	102	4.0	122	4.81
150	6	127	5.0	184	7.25
200	8	140	5.5	214	8.44
250	10	165	6.5	276	10.88
300	12	191	7.5	337	13.25
350	14	191	7.5	306	12.06
400	16	203	8.0	337	13.25
450	18	216	8.5	419	16.50
600	24	279	11.0	463	18.22

22½º Bend Dimensions

Nominal Diameter		A		R	
mm	in.	mm	in.	mm	in.
100	4	102	4.0	256	10.06
150	6	127	5.0	383	16.06
200	8	140	5.5	448	17.62
250	10	165	6.5	575	22.62
300	12	191	7.5	702	27.62
350	14	191	7.5	638	25.12
400	16	203	8.0	702	27.62
	18	216	8.5	767	30.19
	24	279	11.0	957	37.69

11¼º Bend Dimensions

Nominal Diameter		A		R	
mm	in.	mm	in.	mm	in.
100	4	102	4.0	516	20.31
150	6	127	5.0	775	30.50
200	8	140	5.5	900	35.50
250	10	165	6.5	1160	45.69
300	12	191	7.5	1418	55.81
350	14	191	7.5	1289	50.75
400	16	203	8.0	1418	55.81
450	18	216	8.5	1548	60.99
600	24	279	11.0	1933	76.

TEES, CROSSES and LATERALS

Norwood Foundry LIMITED
SINCE 1905

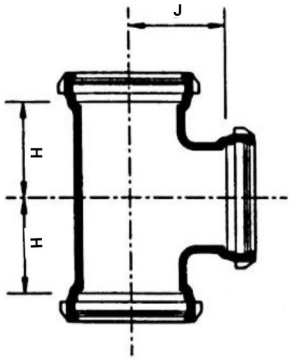

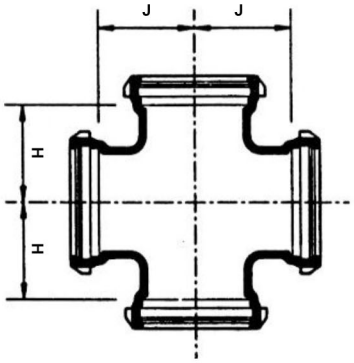

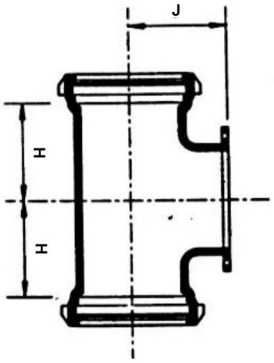

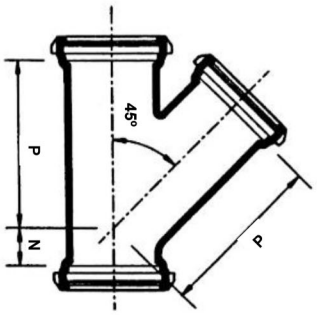

Nominal Diameter Run mm	Nominal Diameter Run in.	Nominal Diameter Branch mm	Nominal Diameter Branch in.	Dimension H and J mm	Dimension H and J in.	Dimension N mm	Dimension N in.	Dimension P mm	Dimension P in.
100	4	100	4	165	6.5	76	3.0	305	12.0
150	6	100	4	203	8.0	89	3.5	368	14.5
150	6	150	6	203	8.0	89	3.5	368	14.5
200	8	100	4	229	9.0	114	4.5	445	17.5
200	8	150	6	229	9.0	114	4.5	445	17.5
200	8	200	8	229	9.0	114	4.5	445	17.5
250	10	100	4	279	11.0	127	5.0	521	20.5
250	10	150	6	279	11.0	127	5.0	521	20.5
250	10	200	8	279	11.0	127	5.0	521	20.5
250	10	250	10	279	11.0	127	5.0	521	20.5
300	12	100	4	305	12.0	140	5.5	622	24.5
300	12	150	6	305	12.0	140	5.5	622	24.5
300	12	200	8	305	12.0	140	5.5	622	24.5
300	12	250	10	305	12.0	140	5.5	622	24.5
300	12	300	12	305	12.0	140	5.5	622	24.5
350	14	150	6	356	14.0				
350	14	200	8	356	14.0				
350	14	250	10	356	14.0				
350	14	300	12	356	14.0				
350	14	350	14	356	14.0				
400	16	150	6	381	15.0				
400	16	200	8	381	15.0				
400	16	250	10	381	15.0				
400	16	300	12	381	15.0				
400	16	350	14	381	15.0				
400	16	400	16	381	15.0				

Run mm	Run in.	Branch mm	Branch in.	H mm	H in.	J mm	J in.
450	18	150	6	330	13.0	394	15.5
450	18	200	8	330	13.0	394	15.5
450	18	250	10	330	13.0	394	15.5
450	18	300	12	330	13.0	394	15.5
450	18	350	14	419	16.5	419	16.5
450	18	400	16	419	16.5	419	16.5
450	18	450	18	419	16.5	419	16.5
600	24	150	6	381	15.0	483	19.0
600	24	200	8	381	15.0	483	19.0
600	24	250	10	381	15.0	483	19.0
600	24	300	12	381	15.0	483	19.0
600	24	350	14	381	15.0	483	19.0
600	24	400	16	381	15.0	483	19.0
600	24	450	18	559	22.0	559	22.0
00	24	600	24	559	22.0	559	22.0

TYTON x FLANGE ADAPTERS

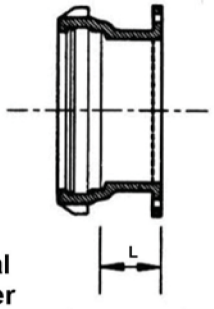

Nominal Diameter		Dimension L	
mm	in.	mm	in.
100	4	203	8
150	6	203	8
200	8	203	8
250	10	203	8
300	12	203	8
350	14	203	8
400	16	203	8
450	18	203	8
600	24	203	8

PLUGS AND CAPS

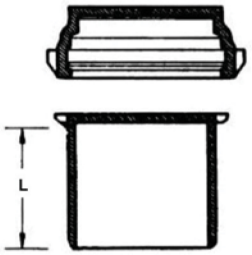

Nominal Diameter		Dimension L		Max. IPT Tapping	
mm	in.	mm	in.	mm	in.
100	4	121	4¾	65	2½
150	6	133	5¼	100	4
200	8	146	5¾	100	4
250	10	146	5¾	100	4
300	12	178	7	100	4
350	14	200	7⅞	100	4
400	16	203	8	100	4
450	18	203	8	100	4
600	24	203	8	100	4

CONCENTRIC REDUCERS

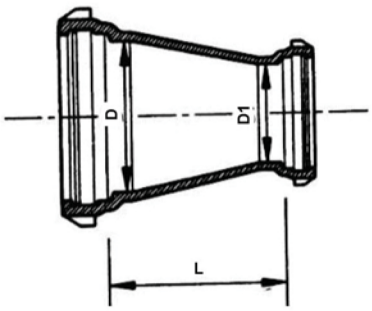

Nominal Diameter D		Nominal Diameter D1		Dimension L	
mm	in.	mm	in.	mm	in.
150	6	100	4	229	9
200	8	100	4	279	11
200	8	150	6	279	11
250	10	100	4	305	12
250	10	150	6	305	12
250	10	200	8	305	12
300	12	100	4	356	14
300	12	150	6	356	14
300	12	200	8	356	14
300	12	250	10	356	14
350	14	150	6	406	16
350	14	200	8	406	16
350	14	250	10	406	16
350	14	300	12	406	16
400	16	150	6	457	18
400	16	200	8	457	18
400	16	250	10	457	18
400	16	300	12	457	18
400	16	350	14	457	18
450	18	200	8	483	19
450	18	250	10	483	19
450	18	300	12	483	19
450	18	350	14	483	19
450	18	400	16	483	19
600	24	250	10	610	24
600	24	300	12	610	24
600	24	350	14	610	24
600	24	400	16	610	24
600	24	450	18	610	24

Norwood Foundry LIMITED
SINCE 1905

605 - 18 Avenue, Nisku, AB T9E 7T7
Phone: 780.955.8844
Fax: 780.955.7600
Toll Free: 1.800.232.7205
www.norwoodfoundry.com